1996 F-Series
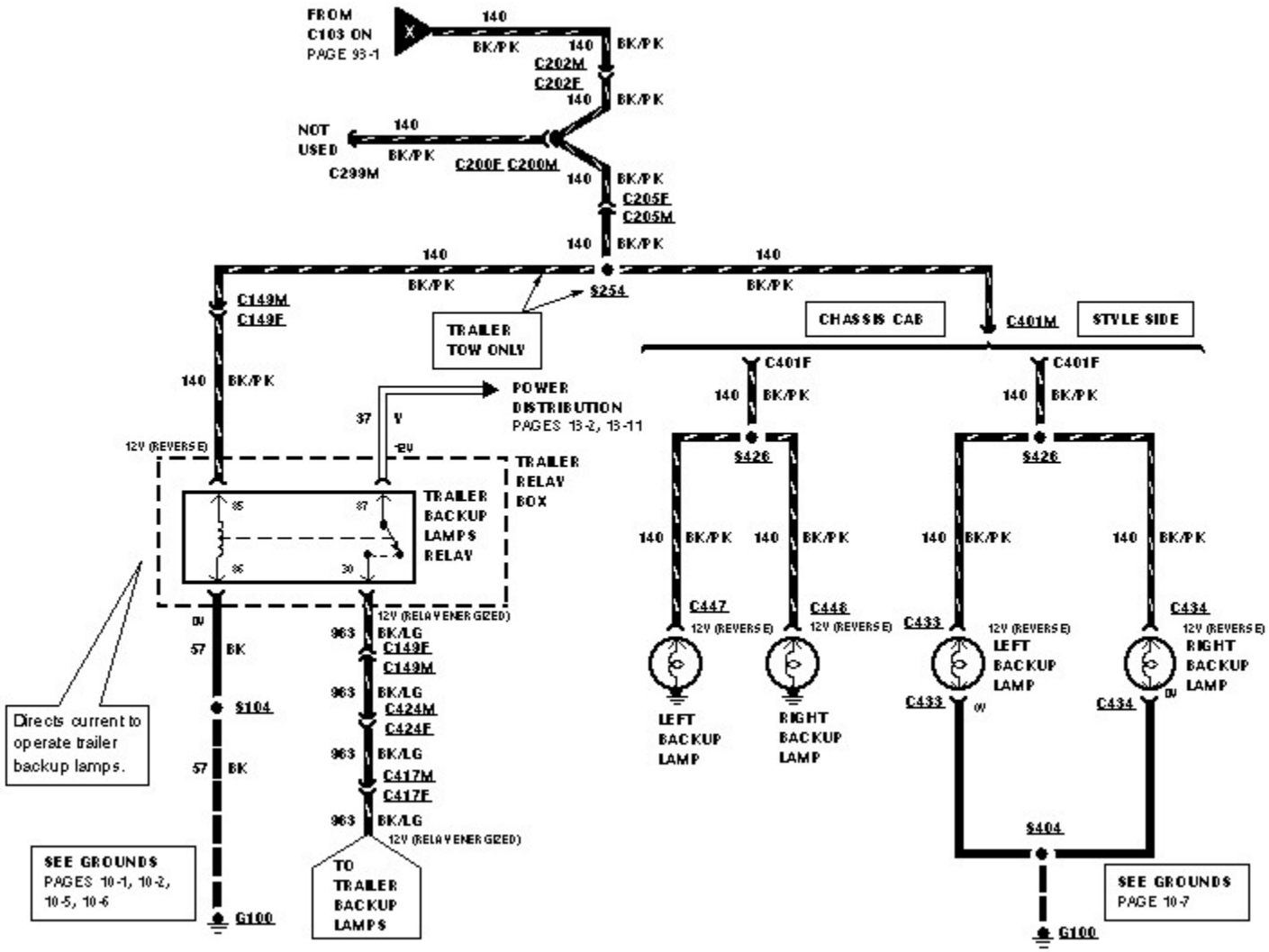
093-003 Backup Lamps